XCITE

XP SERIES

XPERT PERFORMANCE
AUDIO EXCITERS

XP50-4
SPECIFICATIONS

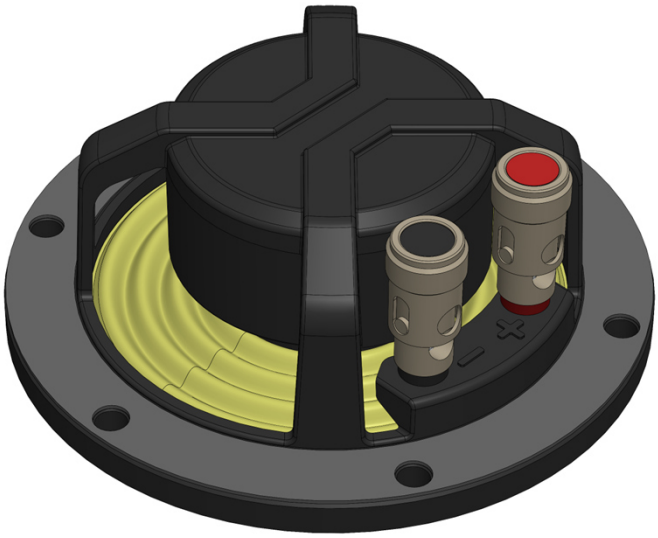

- XTRA POWER
- LONG XCURSION
- INTEGRATED TERMINALS
- FIXED MAGNET DESIGN
- DESIGNED IN GERMANY

XP50-4 SPECIFICATIONS

Electrical and Mechanical Properties			
RMS Noise Test [W]	30		
Long-term Max Power [W]	50		
Frequency Range [Hz] [1]	25Hz – 20kHz		
Nominal Impedance [Ohm]	4		
DC Resistance [Ohm]	3.52		
Le [mH] Re2 [Ohm] Le2 [mH]	0.08	1.60	0.13
Kms [N/mm]	4.53		
Cms [mm/N]	0.22		
Bl [N/A]	4.13		
Motor Efficiency Factor β [dB] [2]	6.85		
Linear Xmax - IEC 60268 [mm]	± 3.0		
Mechanical Xmax [mm]	± 6.0		
Position Related Properties [3]	**Magnet**	**Coil**	
Fs [Hz]	Tbd	192	
Mms [g]	Tbd	3.31	
Rms [kg/s]	Tbd	2.77	
Qts	Tbd	0.50	
Qms	Tbd	1.36	
Qes	Tbd	0.79	
Physical Properties			
Total Weight [g]	Tbd		
Outer Diameter [mm]	81.0		
Cutout Diameter [mm]	63.5		
Total Height [mm]	39.0		
Voice Coil Diameter [mm]	25		
Voice Coil Layers	2		

(1) The final frequency range is dependent on the panel properties

(2) 10log(β) with $\beta = Bl^2/Re$ [ref: 1kg/s]

(3) Exciters have two degrees of freedom - TSP measured by fixing one

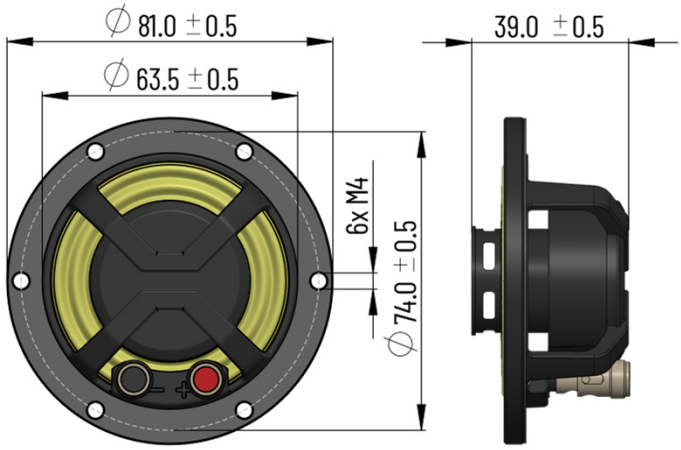

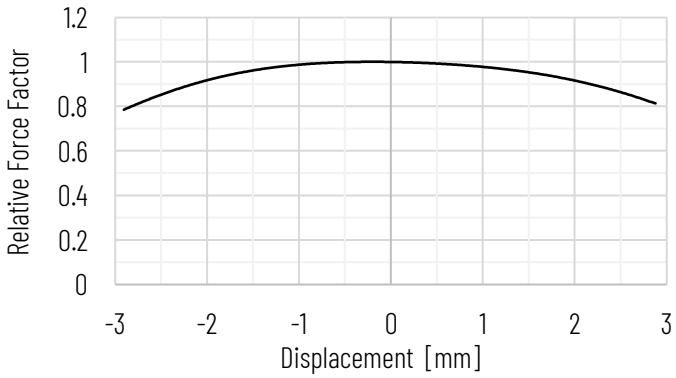

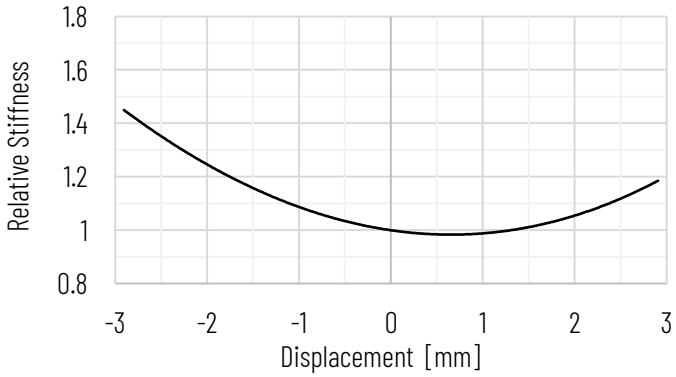

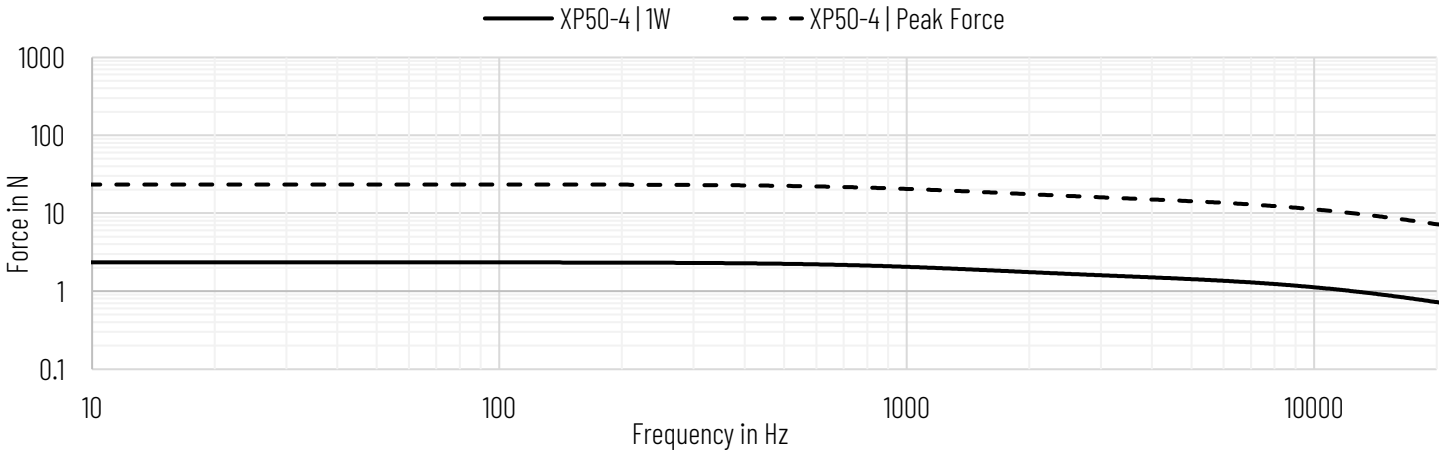

Note: Peak force is estimated from long-term maximum input power assuming a linear model.