0.8" 25TF-1

Tweeter



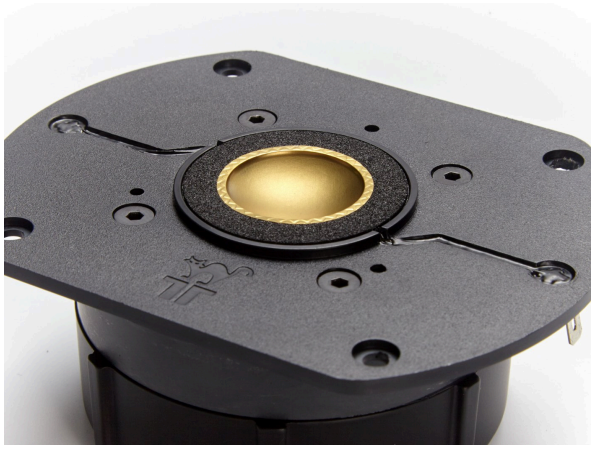

Key features:

- **WORKING RANGE UP TO 30KHZ**
- **LOW RESONANT FREQUENCY**
- **TITANIUM NITRIDE DOME**

Design notes:

The 25TF tweeter has incredibly linear frequency response characteristics, high power handling capability while generating ultra low harmonic distortion artifacts.

The 25TF Dome utilizes REDCATT in-house unique titanium coating technology. Nitride is extremely hard ceramic material. We deposit the nitride from both sides of the titanium dome. The coated dome has dramatically improved flexural rigidity (aka stiffness), compared to the pure titanium dome. The coating has dramatic effect onto the distortion artifacts. The 3rd harmonic distortion stays bellow 0.05% in the working range. Extended high frequency response without major dome breakup modes and improved transient response are the other positive effects of REDCATT Titanium-Nitride Domes.
The 25TF has implemented FEM tuned rear resonant chamber. The chamber is improving the tweeter behavior at low frequencies and further lowering the harmonic distortion. All tweeter parts are bonded together using state of the art high temperature adhesives. Metal parts in the tweeter assembly are coated for extreme weatherization protection.
This tweeter can be used in all applications requiring high quality HF devices. Best mounting is on a flat baffle without any waveguide.

Specifications:

General specs	
Nominal Diameter:	**0.8 "**
Rated Impedance:	**8 ohm**
Power handling	
AES Power:	**10 watts**
Program Power:	**20 watts**
Peak Power:	**40 watts**
Voice Coil	
Diameter:	**20.3 mm**
Winding wire:	**CCAW**
Former:	**Aluminum**
Winding height:	**1.6 mm**

T/S Parameters	
Resonant frequency:	**1200 Hz**
Re:	**5.7 ohm**
Sensitivity:	**91.5 dB**

Design details	
Dome Material:	**Titanium**
Surround material:	**Foam**
Magnet material:	**Ferrite**
Bolt circle diameter:	**108 mm**
Mounting holes:	**4**
Depth:	**49.1 mm**
Net weight:	**0.79 kg**

Ordering codes:

HF-0.8-003-8R-B2-C0001

Legacy code: **25TFX8-065**

Recone kits:

RC25TFX8-065

In many cases REDCATT produces 4, 8 and 16 ohm versions — indicate what impedance you need in your request.

Frequency response & Impedance

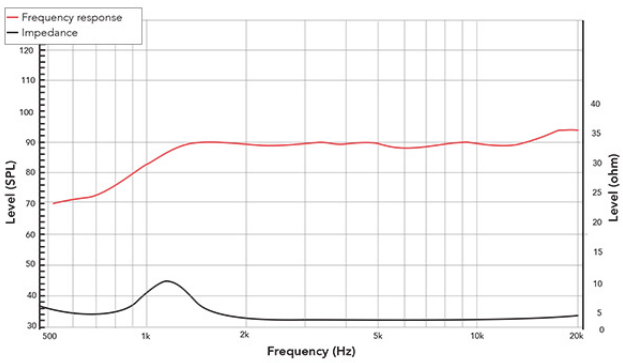

Frequency response measured on IEC baffle

2D drawing

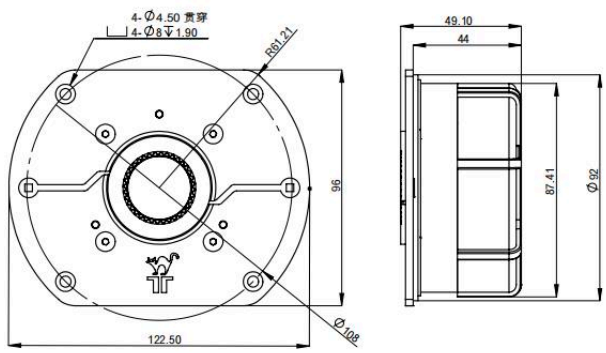

info@redcatt.net

www.redcatt.net